STGD3NB60SD

N-CHANNEL 3A - 600V - DPAK
PowerMESH™ IGBT

TYPE	V_{CES}	$V_{CE(sat)}$	I_C
STGD3NB60SD	600 V	< 1.5 V	3 A

- HIGH INPUT IMPEDANCE (VOLTAGE DRIVEN)
- VERY LOW ON-VOLTAGE DROP (V_{cesat})
- HIGH CURRENT CAPABILITY
- INTEGRATED WHEELING DIODE
- OFF LOSSES INCLUDE TAIL CURRENT

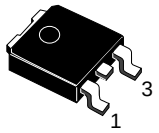

DPAK

INTERNAL SCHEMATIC DIAGRAM

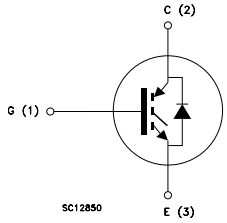

DESCRIPTION

Using the latest high voltage technology based on a patented strip layout, STMicroelectronics has designed an advanced family of IGBTs, the PowerMESH™ IGBTs, with outstanding performances. The suffix “S” identifies a family optimized to achieve minimum on-voltage drop for low frequency applications (<1kHz).

APPLICATIONS

- MOTOR CONTROL
- GAS DISCHARGE LAMP
- STATIC RELAYS

ORDERING INFORMATION

SALES TYPE	MARKING	PACKAGE	PACKAGING
STGD3NB60SDT4	GD3NB60SD	DPAK	TAPE & REEL

ABSOLUTE MAXIMUM RATINGS

Symbol	Parameter	Value	Unit
V_{CES}	Collector-Emitter Voltage (V_{GS} = 0)	600	V
V_{GE}	Gate-Emitter Voltage	± 20	V
I_C	Collector Current (continuous) at T_C = 25°C	6	A
I_C	Collector Current (continuous) at T_C = 100°C	3	A
I_{CM} (▪)	Collector Current (pulsed)	25	A
P_{TOT}	Total Dissipation at T_C = 25°C	48	W
	Derating Factor	0.32	W/°C
T_{stg}	Storage Temperature	– 65 to 175	°C
T_j	Max. Operating Junction Temperature	175	°C

(●) Pulse width limited by safe operating area

THERMAL DATA

Rthj-case	Thermal Resistance Junction-case Max	3.125	°C/W
Rthj-amb	Thermal Resistance Junction-ambient Max	100	°C/W

ELECTRICAL CHARACTERISTICS (TCASE = 25 °C UNLESS OTHERWISE SPECIFIED)

OFF

Symbol	Parameter	Test Conditions	Min.	Typ.	Max.	Unit
$V_{BR(CES)}$	Collectro-Emitter Breakdown Voltage	I_C = 250 µA, V_{GE} = 0	600			V
I_{CES}	Collector cut-off (V_{GE} = 0)	V_{CE} = Max Rating, T_C = 25 °C V_{CE} = Max Rating, T_C = 125 °C			10 100	µA µA
I_{GES}	Gate-Emitter Leakage Current (V_{CE} = 0)	V_{GE} = ±20V , V_{CE} = 0			±100	nA

ON (1)

Symbol	Parameter	Test Conditions	Min.	Typ.	Max.	Unit
$V_{GE(th)}$	Gate Threshold Voltage	V_{CE} = V_{GE}, I_C = 250µA	2.5		4.5	V
$V_{CE(sat)}$	Collector-Emitter Saturation Voltage	V_{GE} = 15V, I_C = 1.5 A V_{GE} = 15V, I_C = 3 A V_{GE} = 15V, I_C = 7 A, T_J =125 °C		1 1.2 1.1	1.5	V V V

DYNAMIC

Symbol	Parameter	Test Conditions	Min.	Typ.	Max.	Unit
g_{fs}	Forward Transconductance	V_{CE} = 10 V , I_C = 3 A	1.7	2.5		S
C_{ies} C_{oes} C_{res}	Input Capacitance Output Capacitance Reverse Transfer Capacitance	V_{CE} = 25V, f = 1 MHz, V_{GE} = 0		255 30 5.6		pF pF pF
Q_G Q_{GE} Q_{GC}	Total Gate Charge Gate-Emitter Charge Gate-Collector Charge	V_{CE} = 480 V, I_C = 3 A, V_{GE} = 15V		18 5.4 5.5	23	nC nC nC
I_{CL}	Latching Current	V_{clamp} = 380 V , Tj = 25°C R_G = 1KΩ	15			A

ELECTRICAL CHARACTERISTICS (CONTINUED)
SWITCHING ON

Symbol	Parameter	Test Conditions	Min.	Typ.	Max.	Unit
$t_{d(on)}$ t_r	Turn-on Delay Time Rise Time	V_{CC} = 480 V, I_C = 3 A R_G = 1KΩ , V_{GE} = 15 V		125 150		µs µs
$(di/dt)_{on}$ Eon	Turn-on Current Slope Turn-on Switching Losses	V_{CC}= 480 V, I_C = 3 A, R_G=1KΩ V_{GE} = 15 V, Tj = 125°C		50 1100		A/µs µJ

SWITCHING OFF

Symbol	Parameter	Test Conditions	Min.	Typ.	Max.	Unit
t_c $t_r(V_{off})$ $t_{d(on)}$ t_f E_{off}(**)	Cross-over Time Off Voltage Rise Time Delay Time Fall Time Turn-off Switching Loss	V_{cc} = 480 V, I_C = 3 A, R_{GE} = 1KΩ , V_{GE} = 15 V		1.8 1.0 3.4 0.72 1.15		µs µs µs µs mJ
t_c $t_r(V_{off})$ $t_{d(on)}$ t_f E_{off}(**)	Cross-over Time Off Voltage Rise Time Delay Time Fall Time Turn-off Switching Loss	V_{cc} = 480 V, I_C = 3 A, R_{GE} = 1KΩ , V_{GE} = 15 V, Tj = 125°C		2.8 1.45 3.6 1.2 1.8		µs µs µs µs mJ

COLLECTOR-EMITTER DIODE

Symbol	Parameter	Test Conditions	Min.	Typ.	Max.	Unit
I_f I_{fm}	Forward Current Forward Current pulsed				3 25	A A
V_f	Forward On-Voltage	I_f = 3 A I_f = 1 A		1.55 1.15	1.9	V V
t_{rr} Q_{rr} I_{rrm}	Reverse Recovery Time Reverse Recovery Charge Reverse Recovery Current	I_f = 3 A ,V_R = 200 V, Tj =125°C, di/dt = 100A/µs		1700 4500 9.5		ns nC A

Note: 1. Pulsed: Pulse duration = 300 µs, duty cycle 1.5 %.
2. Pulse width limited by max. junction temperature.
(**) Losses also include the Tail (Jedec Standardization)

Thermal Impedance

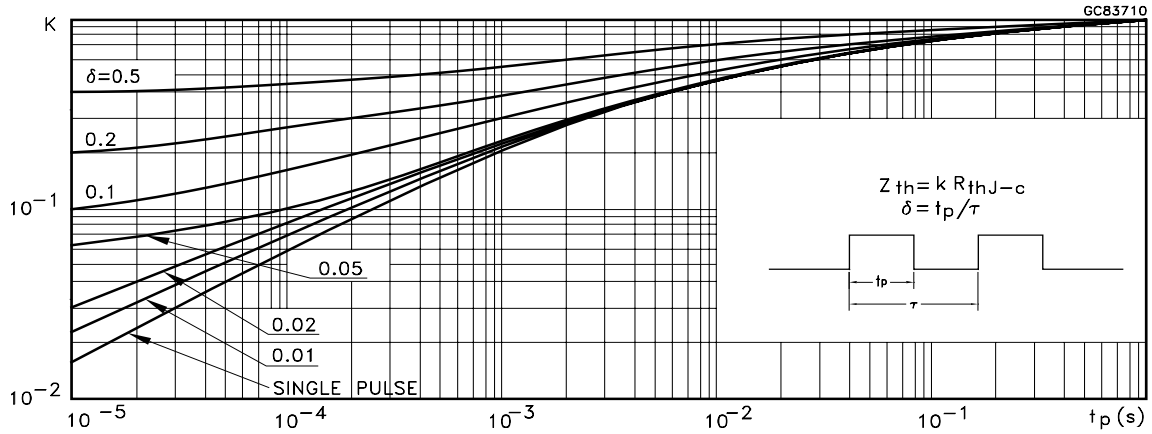

Output Characteristics

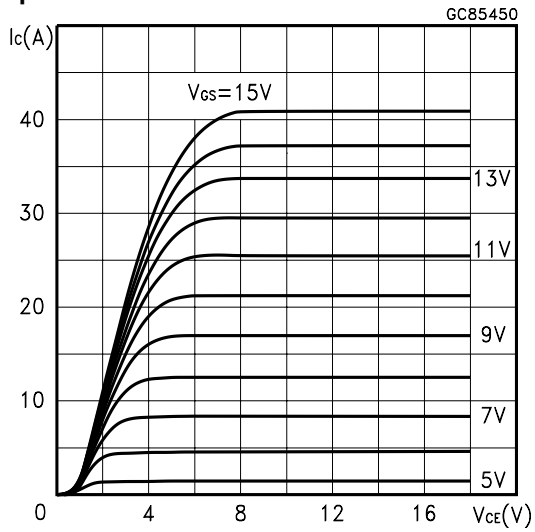

Transfer Characteristics

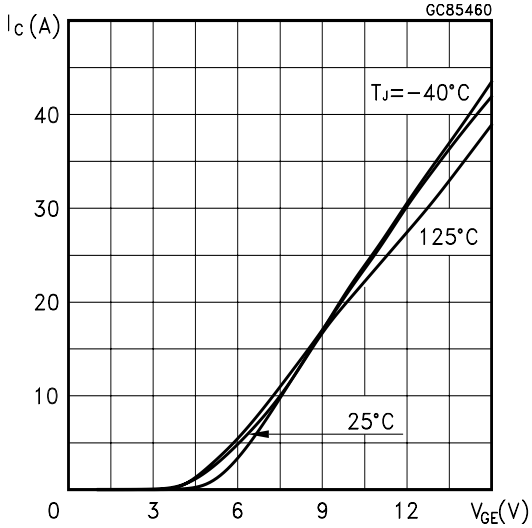

Transconductance

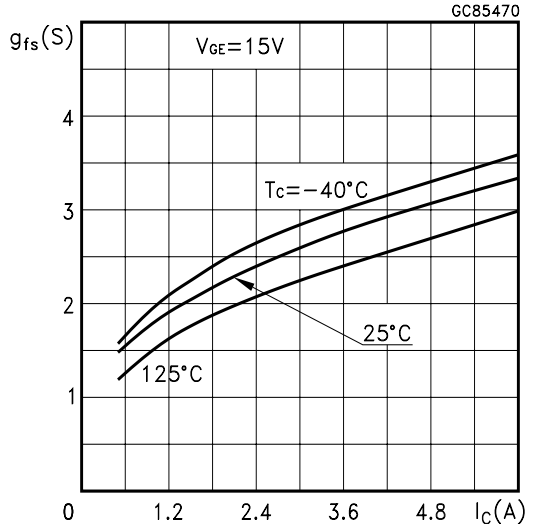

Collector-Emitter On Voltage vs Temperature

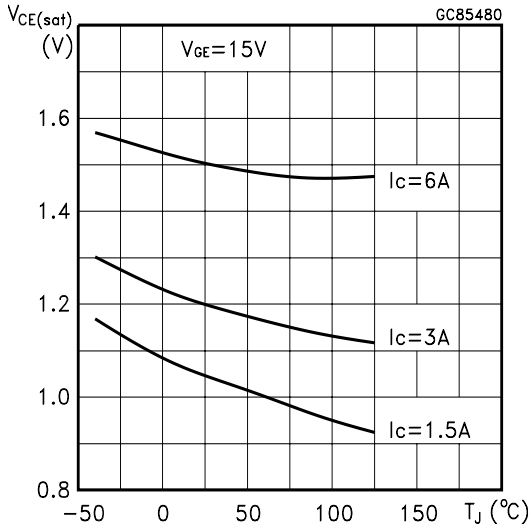

Collector-Emitter On Voltage vs Collettor Current

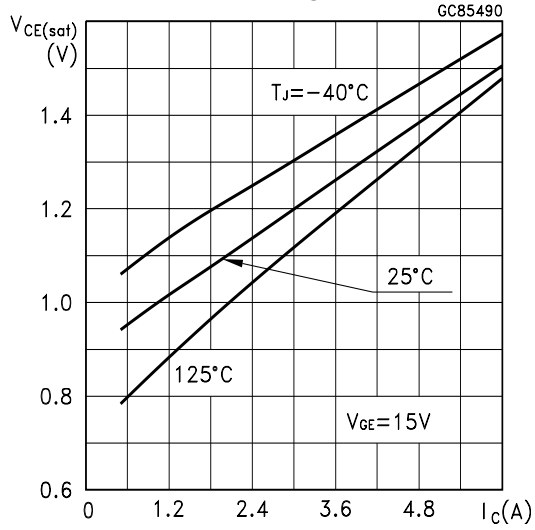

Gate Threshold vs Temperature

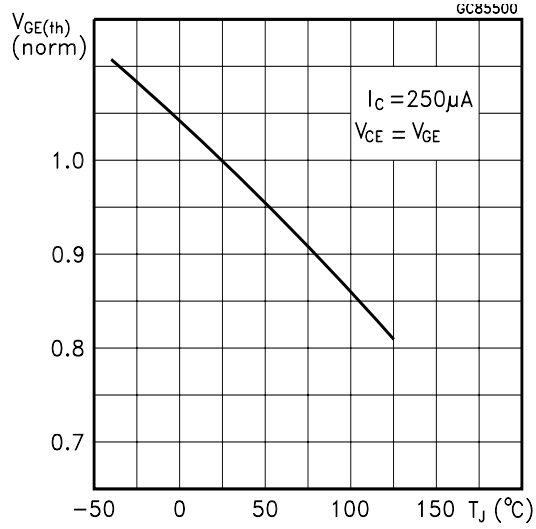

Normalized Breakdown Voltage vs Temperature

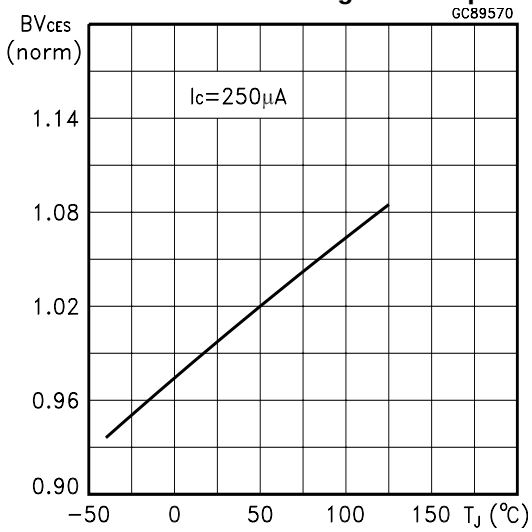

Capacitance Variations

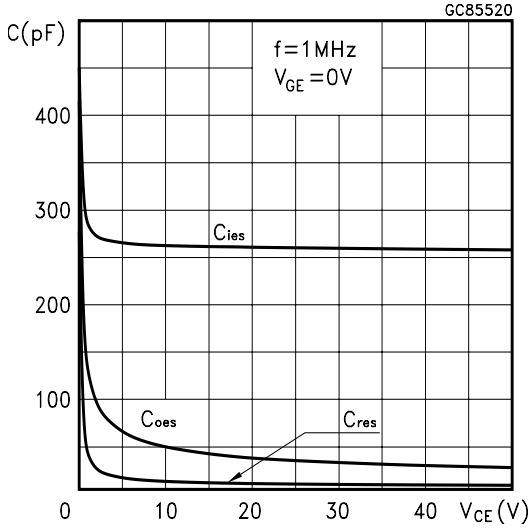

Gate Charge vs Gate-Emitter Voltage

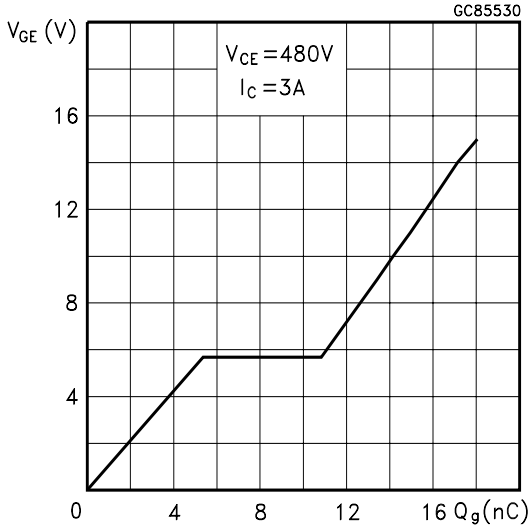

Off Losses vs Collector Current

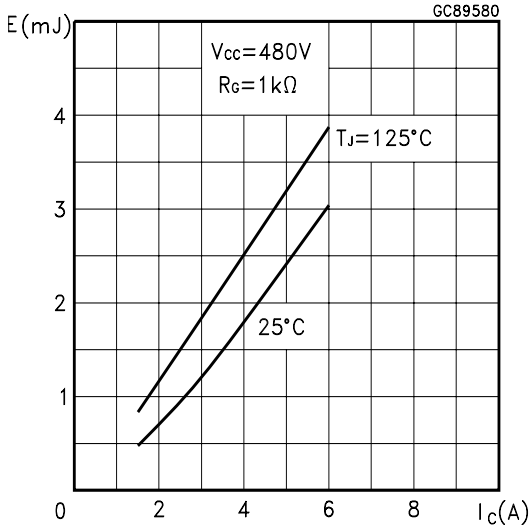

Off Losses vs Temperature

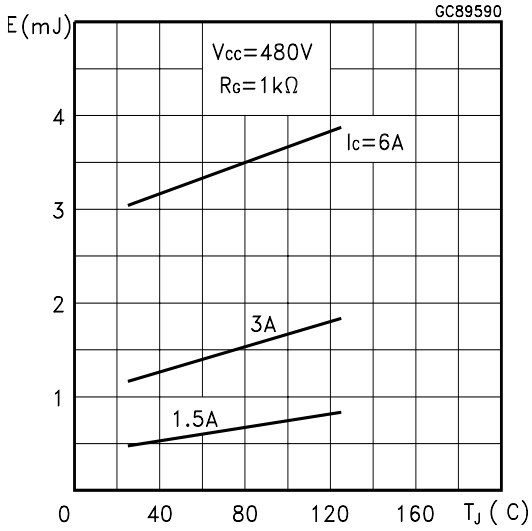

Switching Off Safe Operating Area

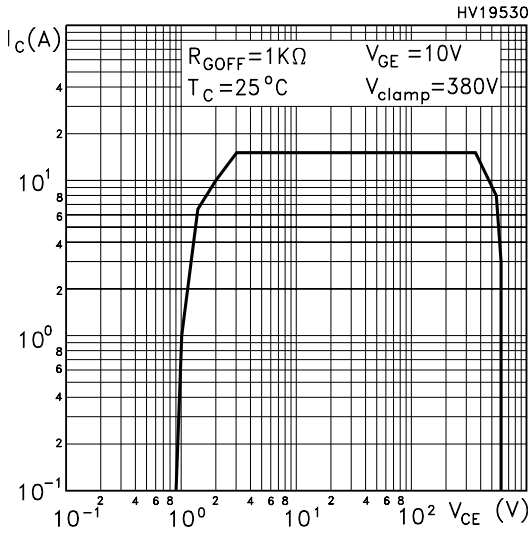

Diode Forward Voltage vs Tj

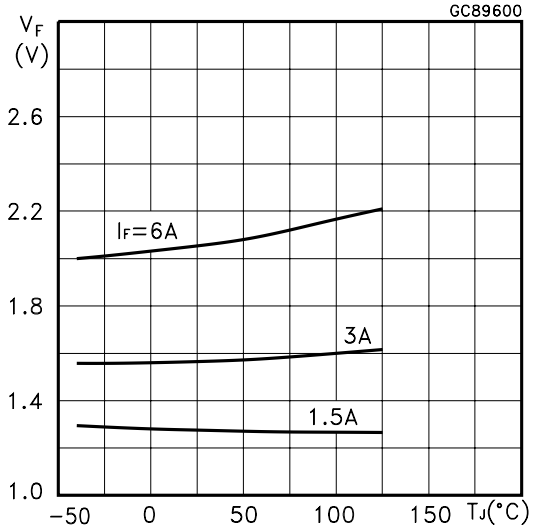

Diode Forward Voltage

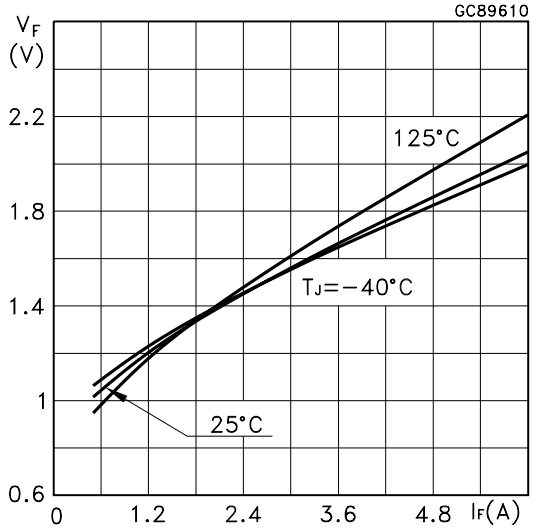

Fig. 1: Gate Charge test Circuit

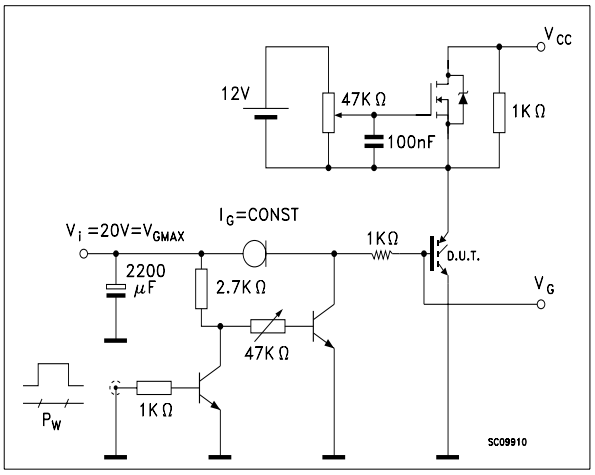

Fig. 2: Test Circuit For Inductive Load Switching

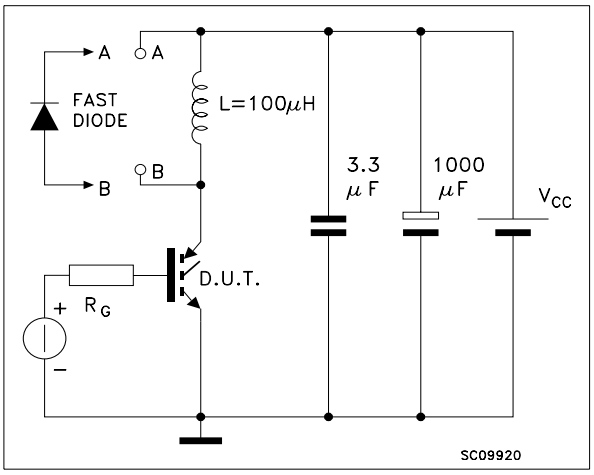

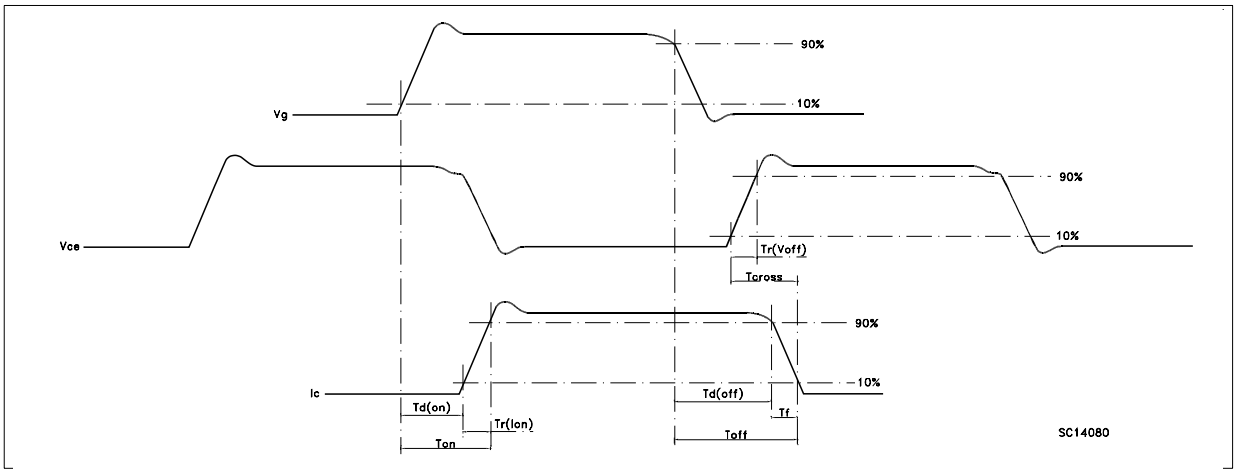

TO-252 (DPAK) MECHANICAL DATA

DIM.	mm			inch		
	MIN.	TYP.	MAX.	MIN.	TYP.	MAX.
A	2.20		2.40	0.087		0.094
A1	0.90		1.10	0.035		0.043
A2	0.03		0.23	0.001		0.009
B	0.64		0.90	0.025		0.035
B2	5.20		5.40	0.204		0.213
C	0.45		0.60	0.018		0.024
C2	0.48		0.60	0.019		0.024
D	6.00		6.20	0.236		0.244
E	6.40		6.60	0.252		0.260
G	4.40		4.60	0.173		0.181
H	9.35		10.10	0.368		0.398
L2		0.8			0.031	
L4	0.60		1.00	0.024		0.039
V2	0°		8°	0°		0°

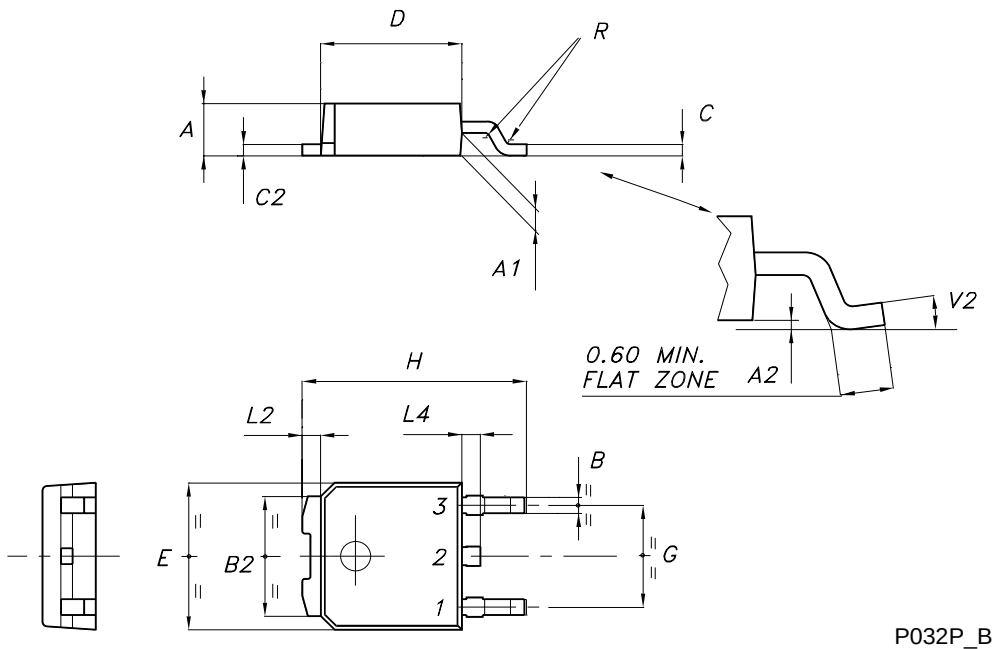

P032P_B

DPAK FOOTPRINT

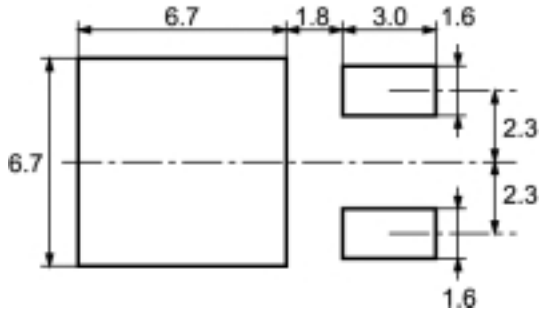

All dimensions are in millimeters

TUBE SHIPMENT (no suffix)*

BASE QTY
75

BULK QTY
3000

Tube length 532 (±0.5)

All dimensions are in millimeters

TAPE AND REEL SHIPMENT (suffix "T4")*

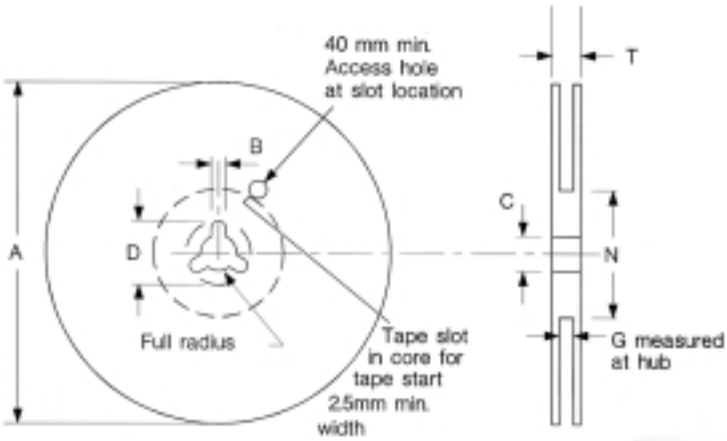

REEL MECHANICAL DATA

DIM.	mm		inch	
	MIN.	MAX.	MIN.	MAX.
A		330		12.992
B	1.5		0.059	
C	12.8	13.2	0.504	0.520
D	20.2		0.795	
G	16.4	18.4	0.645	0.724
N	50		1.968	
T		22.4		0.881

BASE QTY	BULK QTY
2500	2500

TAPE MECHANICAL DATA

DIM.	mm		inch	
	MIN.	MAX.	MIN.	MAX.
A0	6.8	7	0.267	0.275
B0	10.4	10.6	0.409	0.417
B1		12.1		0.476
D	1.5	1.6	0.059	0.063
D1	1.5		0.059	
E	1.65	1.85	0.065	0.073
F	7.4	7.6	0.291	0.299
K0	2.55	2.75	0.100	0.108
P0	3.9	4.1	0.153	0.161
P1	7.9	8.1	0.311	0.319
P2	1.9	2.1	0.075	0.082
R	40		1.574	
W	15.7	16.3	0.618	0.641

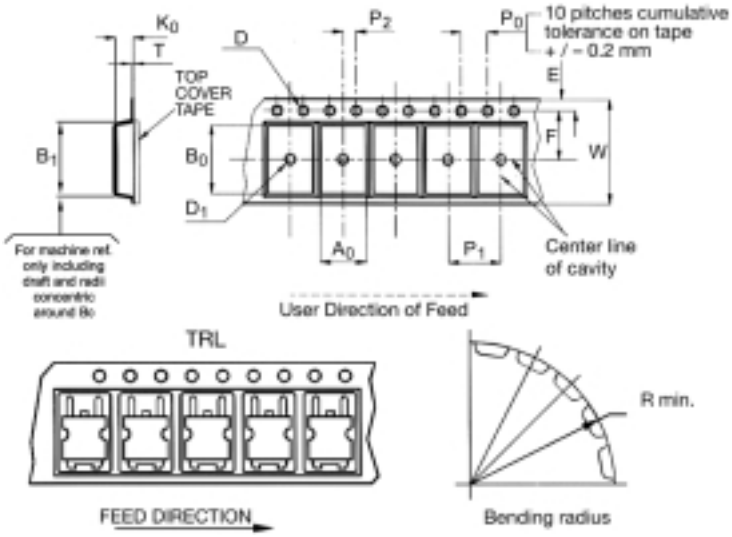

* on sales type

Information furnished is believed to be accurate and reliable. However, STMicroelectronics assumes no responsibility for the consequences of use of such information nor for any infringement of patents or other rights of third parties which may result from its use. No license is granted by implication or otherwise under any patent or patent rights of STMicroelectronics. Specifications mentioned in this publication are subject to change without notice. This publication supersedes and replaces all information previously supplied. STMicroelectronics products are not authorized for use as critical components in life support devices or systems without express written approval of STMicroelectronics.

The ST logo is a registered trademark of STMicroelectronics

All other names are the property of their respective owners

© 2004 STMicroelectronics - All Rights Reserved

STMicroelectronics GROUP OF COMPANIES

Australia - Belgium - Brazil - Canada - China - Czech Republic - Finland - France - Germany - Hong Kong - India - Israel - Italy - Japan - Malaysia - Malta - Morocco - Singapore - Spain - Sweden - Switzerland - United Kingdom - United States.

http://www.st.com